LoadcellTechnologieInc.

CELLTEC

Compression Load Cell

CSG

Type: Compression

Material: Stainless Steel

Protection: IP 68

Features: High Accuracy

Application: Weighbridge Road
Weighbridge Rail
Truck & Silo Scales
Hopper Weigher

Specifications:

Capacity		10t / 20t / 30t / 40t / 50t	
Accuracy Class		**C3**	**C4**
Max. Number of Verification Intervals	n_{max}	3000	4000
Minimum Load Cell Verification Level	V_{min}	Emax/12000	Emax/14000
Temperature Effect on Zero	%FS/10°C	≤ ± 0.0120	≤ ± 0.0100
Temperature Effect in Sensitivity	%FS/10°C	≤ ± 0.0110	≤ ± 0.0090
Combined Error	%FS	≤ ± 0.0200	≤ ± 0.0180
Creep	%FS	≤ ± 0.0160	≤ ± 0.0120
Output Sensitivity	mv/v	2.0 ± 0.002	
Input Resistance	Ω	700 ± 7	
Output Resistance	Ω	703 ± 4	
Insulation Resistance	MΩ	≥ 5000	
Zero Balance	%FS	≤ 1.0	
Temperature, Compensated	°C	-10 ~ +40	
Temperature, Operating	°C	-40 ~ +80	
Excitation, Recommended	v	5 ~ 12	
Safe Overload	%FS	150	
Ultimate Overload	%FS	300	
Standard Cable length	m	15.0	

Dimensions:

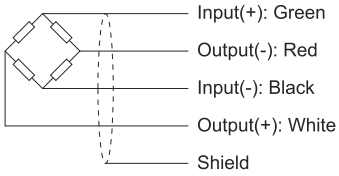

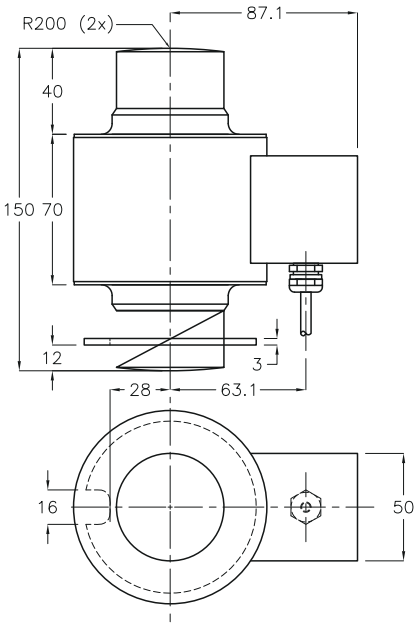

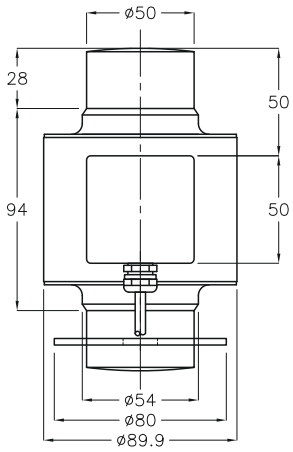

All dimensions: mm.